INSTALLATION INSTRUCTION

LOW LEVEL BOLLARD 12V

6701 / 6702 / 6703 / 6704 / 6705

SAFETY INSTRUCTION

IMPORTANT: NEVER attempt any work without shutting off the electricity.

- Read all instructions before installing.
- System is intended for installation by a qualified electrician in accordance with the National Electrical Code and local regulations.
- Place the wall switch in the "OFF" position.
- Go to the main fuse box, or circuit breaker. Unscrew the fuse(s) or switch "OFF" the circuit breaker switch(es) that control the power to the space that you are working on.

CAUTION:

All parts must be used as indicated in these instructions. Do not substitute any parts, leave parts out, or use any parts that are worn out or broken. Failure to follow this instruction could invalidate the UL listing of this fixture.

AVERTISSEMENT

IMPORTANT : COUPEZ L'ÉLECTRICITÉ AVANT TOUTE MANIPULATION.

- Lisez toutes les instructions avant d'installer.
- Système est destiné à être installé par un électricien qualifié en conformité avec le code national de l'électricité et les règlements locaux.
- Placez l'interrupteur mural en position d'arrêt (« OFF »).
- Accédez au panneau central de disjoncteurs ou de fusibles de votre demeure et placez l'interrupteur principal en position d'arrêt (« OFF »).

MISE EN GARDE

Toutes les pièces doivent être utilisées tel qu'il est indiqué dans ces instructions. Ne remplacez pas les pièces, n'en laissez pas de côté et ne les utilisez pas si elles sont usées ou brisées. Le non-respect de ces instructions peut annuler l'homologation UL du luminaire.

THIS INSTRUCTIONS APPLY TO THE MODELS BELOW:

*Note: Transformer is required to power the fixture. (Sold Separately)

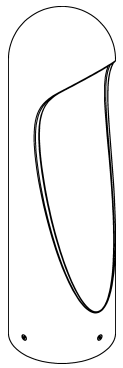

6701

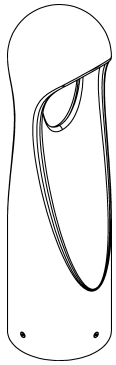

6702

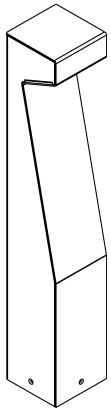

6703

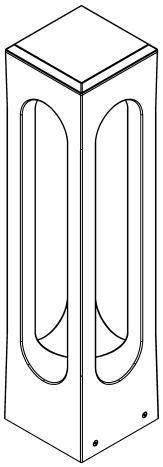

6704

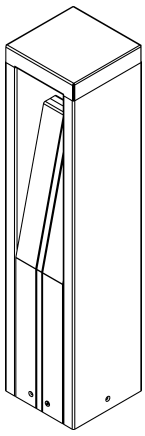

6705

MOUNTING ACCESSORIES (INCLUDED IN BOX)

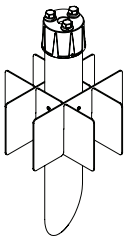

Mounting Stake
Qty: 1pc

Outdoor Rated Wire Nut
Qty: 2pcs

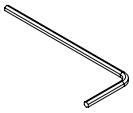

Hex Key
Qty: 1pc

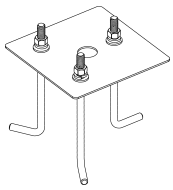

Concrete Pour Kit
(Order Separately)

waclighting.com
Phone (800) 526.2588
Fax (800) 526.2585

Headquarters, East Manufacturing Facility
44 Harbor Park Drive
Port Washington, NY 11050

South East Manufacturing Facility
1600 Distribution Ct
Lithia Springs, GA 30122

Central Manufacturing Facility
1700 South J Elmer Freeway, Ste 100
Cedar Hill, TX 75104

West Manufacturing Facility
1750 S Archibald Ave
Ontario, CA 91761

WAC Lighting retains the right to modify the design of our products at any time as part of the company's continuous improvement program. Oct 2025

INSTALLATION INSTRUCTION

LOW LEVEL BOLLARD 12V

6701 / 6702 / 6703 / 6704 / 6705

INSTALLATION

1. Make sure your main power is off.

2. Excavate a trench for the Mounting Stake.
   The Mounting Stake requires approximately a one (1) square foot hole to facilitate installation.
   The excavated should be approximately 14" deep, depending on your local code. This will allow the hex-head set screw on the Mounting Stake to remain above ground when the installation is completed.

3. Secure Fixture Mounting Plate onto the Stake Metal Cap by using the Stake Mounting Screws.

4. Secure the Stake Metal Cap assembly onto the Mounting Stake by tighten the Cap Mounting Screw (Note: Make sure the Fixture Mounting Plate is Oriented at desired position.)

5. Secure the Bollard Fixture on top of the Fixture Mounting Plate using the Fixture Mounting Screws.

6. After proper wirings are done by using the outdoor rated wire nuts, back fill the hole and make sure the fixture is leveled and stable.

7. Turn the main power supply back on and make sure the fixtures light up

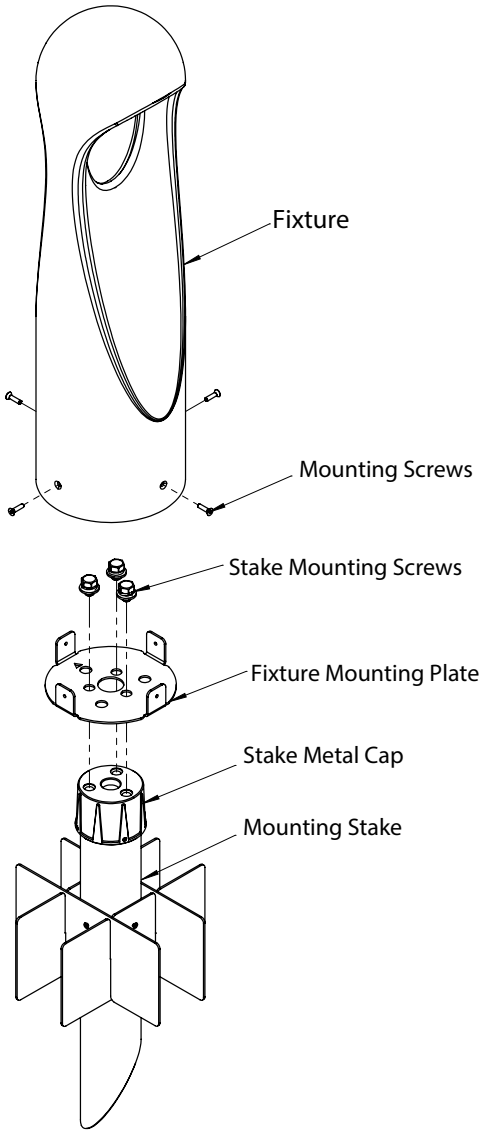

waclighting.com
Phone (800) 526.2588
Fax (800) 526.2585

Headquarters, East Manufacturing Facility
44 Harbor Park Drive
Port Washington, NY 11050

South East Manufacturing Facility
1600 Distribution Ct
Lithia Springs, GA 30122

Central Manufacturing Facility
1700 South J Elmer Freeway, Ste 100
Cedar Hill, TX 75104

West Manufacturing Facility
1750 S Archibald Ave
Ontario, CA 91761

WAC Lighting retains the right to modify the design of our products at any time as part of the company's continuous improvement program. Oct 2025

INSTALLATION INSTRUCTION

LOW LEVEL BOLLARD 12V

6701 / 6702 / 6703 / 6704 / 6705

INSTALLING ANCHOR BOLT IN CONCRETE (Order Separately)

1. Make sure your main power is off.

2. Prior to installing the fixture, secure the anchor bolts And alignment plate into the cement. Insure the leads, electrical wires are passing up through the center hole of the alignment plate.

   For shallow base bollards, insure that the anchor bolts length on top of the cement surface do not exceed 1-1/8" (29mm).

3. After the cement has cured, remove the alignment Plate and install the Fixture Baseplate until it's secure. Again, make sure to feed the leads, electrical wires up through the center hole of the baseplate.

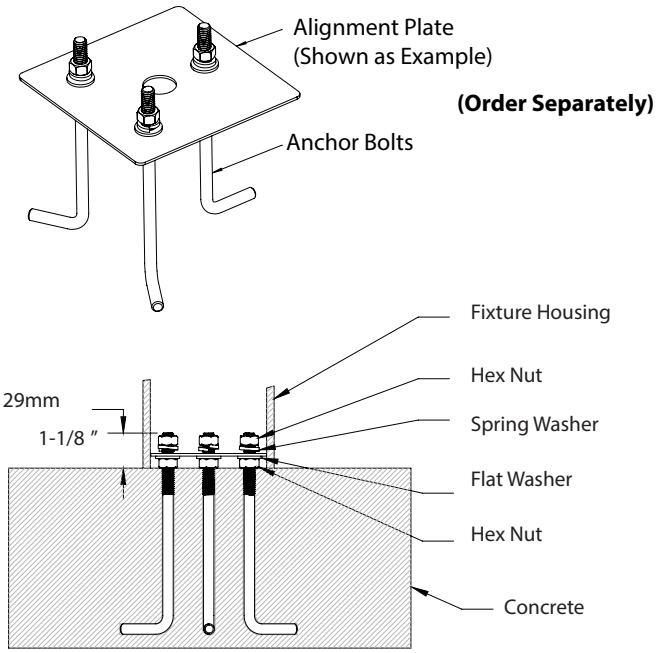

FIXTURE INSTALLATION

1. Use leveler to ensure that the baseplate is leveled. Connect the supply lines from the supply conduit to the fixture input wires per the local electrical code. (See Wiring Diagram Below)

   Tie the wires so that they do not lie on or have Contact with the ground.

2. Set the Bollard Fixture onto the Fixture Baseplate

3. Secure the fixture by tighten the Fixture Mounting Screws with Hex Key. Be sure not to crimp any wires between the Fixture Baseplate and the Fixture Housing Tube.

4. Turn the main power supply back on and make sure the fixtures light up.

5. You have now completed the installation of your fixture.

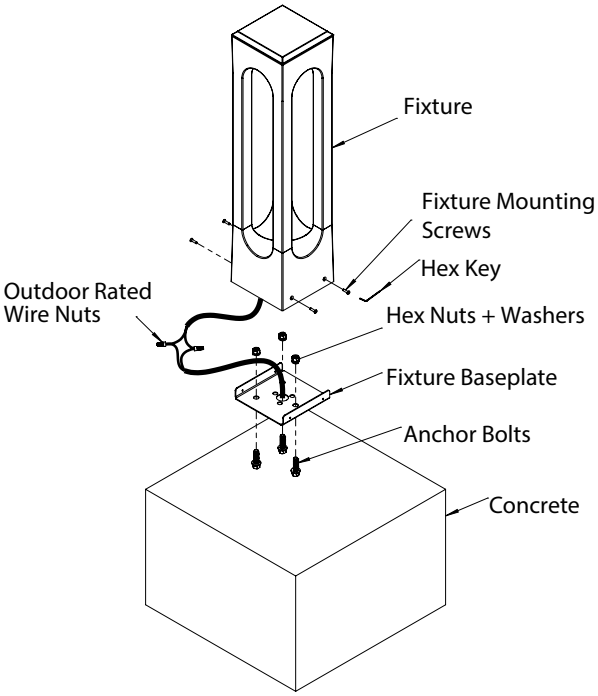

waclighting.com
Phone (800) 526.2588
Fax (800) 526.2585

Headquarters, East Manufacturing Facility
44 Harbor Park Drive
Port Washington, NY 11050

South East Manufacturing Facility
1600 Distribution Ct
Lithia Springs, GA 30122

Central Manufacturing Facility
1700 South J Elmer Freeway, Ste 100
Cedar Hill, TX 75104

West Manufacturing Facility
1750 S Archibald Ave
Ontario, CA 91761

WAC Lighting retains the right to modify the design of our products at any time as part of the company's continuous improvement program. Oct 2025